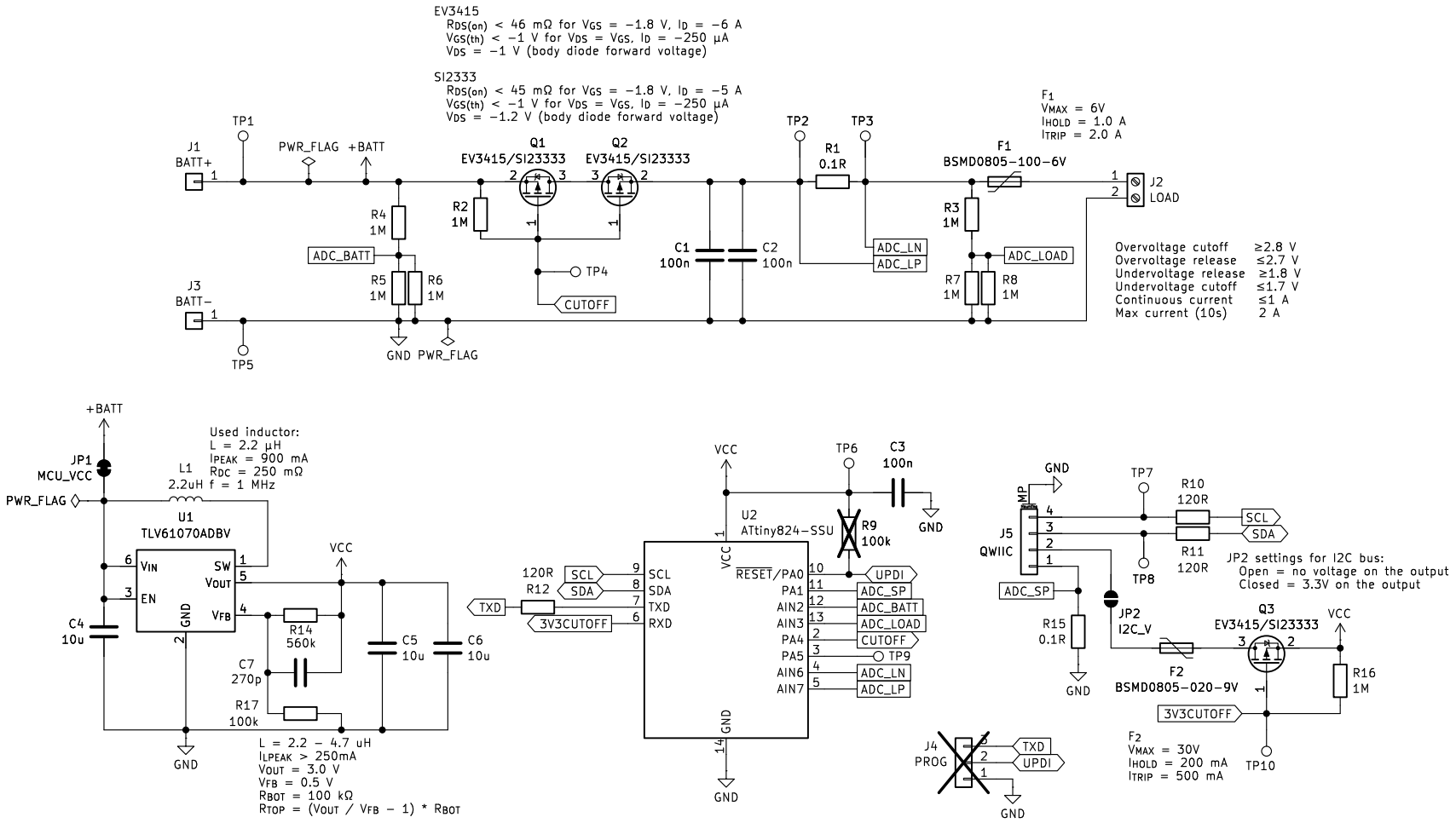

Vlastimil Slinták
µArt.cz

Sheet: /
File: lto-bms-revB.kicad_sch

Title: LTO Battery Management System

Size: A4	Date: 2024-10-24	**Rev: B**
KiCad E.D.A. 9.0.7		Id: 1/1