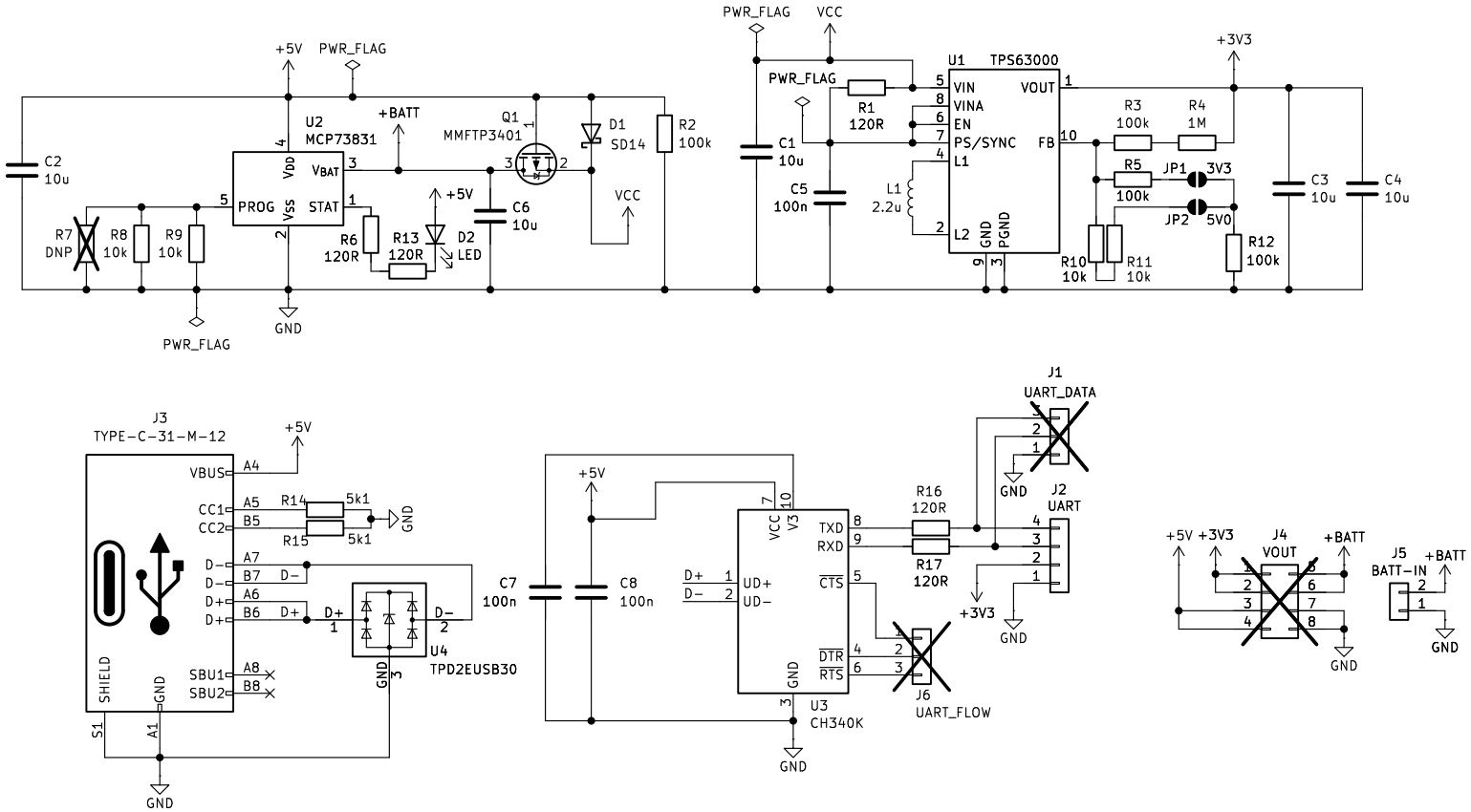

Vlastimil Slinták
µArt.cz

Sheet: /
File: usb-charger.kicad_sch

Title: USB-C Battery Charger

Size: A4	Date: 2024-09-27	**Rev: A**
KiCad E.D.A. 9.0.7		Id: 1/1