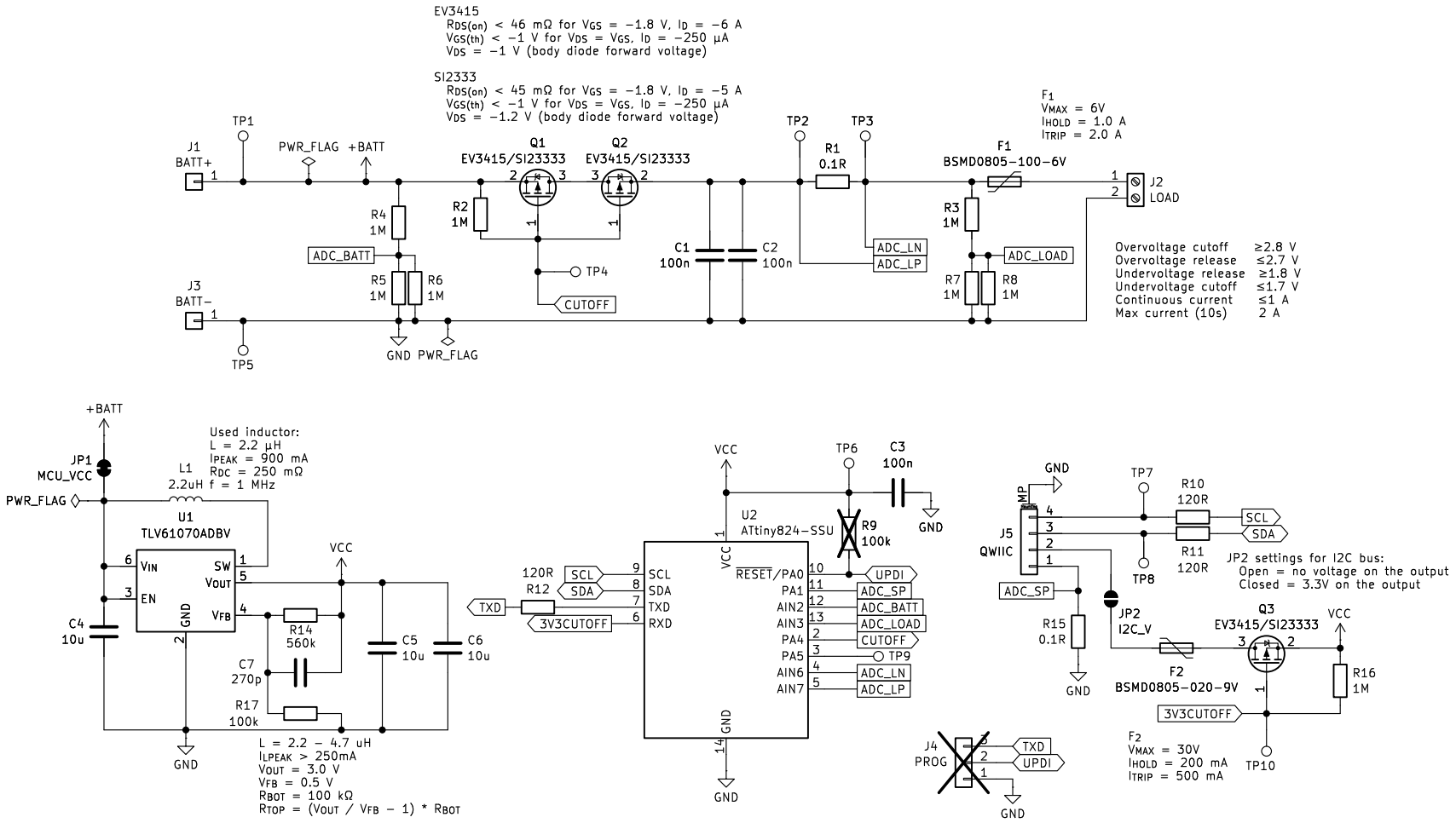
EV3415
RDS(on) < 46 mΩ for VGS = −1.8 V, ID = −6 A
VGS(th) < −1 V for VDS = VGS, ID = −250 µA
VDS = −1 V (body diode forward voltage)
SI2333
RDS(on) < 45 mΩ for VGS = −1.8 V, ID = −5 A
VGS(th) < −1 V for VDS = VGS, ID = −250 µA
VDS = −1.2 V (body diode forward voltage)
F1
VMAX = 6V
IHOLD = 1.0 A
ITRIP = 2.0 A
J1
BATT+
TP1
PWR_FLAG
+BATT
Q1
EV3415/SI23333
Q2
EV3415/SI23333
TP2
TP3
R1
0.1R
F1
BSMD0805-100-6V
J2
LOAD
R4
1M
R2
1M
R3
1M
ADC_BATT
ADC_LN
ADC_LP
ADC_LOAD
C1
100n
C2
100n
TP4
R5
1M
R6
1M
R7
1M
R8
1M
CUTOFF
J3
BATT−
TP5
GND
PWR_FLAG
Overvoltage cutoff ≥2.8 V
Overvoltage release ≤2.7 V
Undervoltage release ≥1.8 V
Undervoltage cutoff ≤1.7 V
Continuous current ≤1 A
Max current (10s) 2 A
+BATT
JP1
MCU_VCC
PWR_FLAG
Used inductor:
L = 2.2 µH
IPEAK = 900 mA
RDC = 250 mΩ
L1
2.2uH f = 1 MHz
U1
TLV61070ADBV
VIN
EN
SW
VOUT
VFB
GND
C4
10u
VCC
R14
560k
C7
270p
R17
100k
C5
10u
C6
10u
GND
L = 2.2 – 4.7 uH
ILPEAK > 250mA
VOUT = 3.0 V
VFB = 0.5 V
RBOT = 100 kΩ
RTOP = (VOUT / VFB – 1) * RBOT
VCC
TP6
C3
100n
GND
U2
ATtiny824-SSU
R9
100k
120R
R12
SCL
SDA
TXD
3V3CUTOFF
RESET/PA0
PA1
AIN2
AIN3
PA4
PA5
AIN6
AIN7
UPDI
ADC_SP
ADC_BATT
ADC_LOAD
CUTOFF
TP9
ADC_LN
ADC_LP
GND
J4
PROG
TXD
UPDI
GND
GND
TP7
R10
120R
R11
120R
J5
QWIIC
SCL
SDA
TP8
ADC_SP
R15
0.1R
GND
JP2
I2C_V
JP2 settings for I2C bus:
Open = no voltage on the output
Closed = 3.3V on the output
Q3
EV3415/SI23333
VCC
F2
BSMD0805-020-9V
R16
1M
3V3CUTOFF
F2
VMAX = 30V
IHOLD = 200 mA
ITRIP = 500 mA
TP10