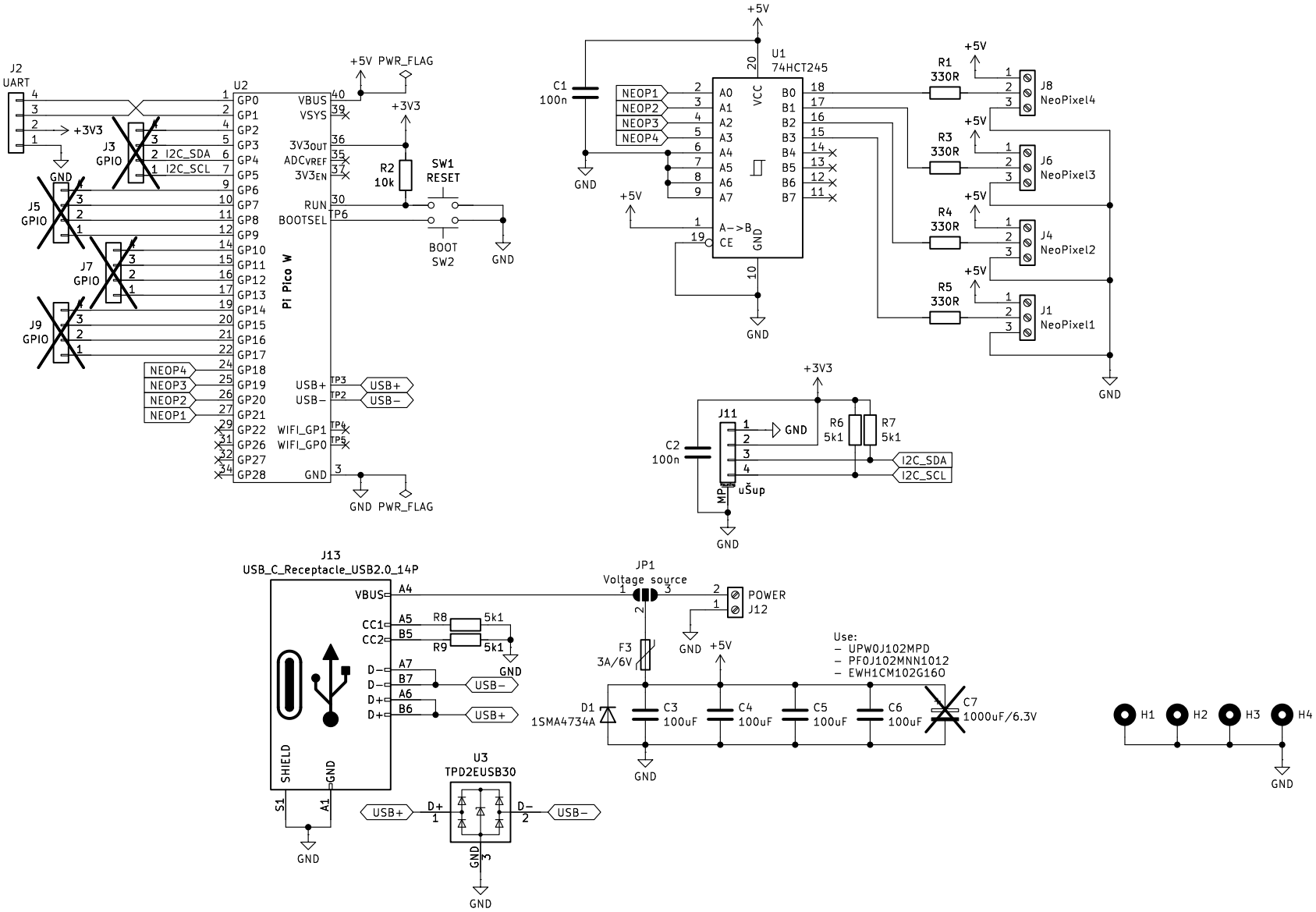
J2
UART
+3V3
J3
GPIO
I2C_SDA
I2C_SCL
GND
J5
GPIO
J7
GPIO
J9
GPIO
U2
Pi Pico W
GP0
GP1
GP2
GP3
GP4
GP5
GP6
GP7
GP8
GP9
GP10
GP11
GP12
GP13
GP14
GP15
GP16
GP17
GP18
GP19
GP20
GP21
GP22
GP26
GP27
GP28
VBUS
VSYS
3V3OUT
ADCVREF
3V3EN
RUN
BOOTSEL
USB+
USB−
WIFI_GP1
WIFI_GP0
GND
NEOP4
NEOP3
NEOP2
NEOP1
+5V PWR_FLAG
+3V3
R2
10k
SW1
RESET
BOOT
SW2
GND PWR_FLAG
C1
100n
U1
74HCT245
VCC
A0
A1
A2
A3
A4
A5
A6
A7
B0
B1
B2
B3
B4
B5
B6
B7
A−>B
CE
R1
330R
R3
330R
R4
330R
R5
330R
J8
NeoPixel4
J6
NeoPixel3
J4
NeoPixel2
J1
NeoPixel1
J11
uŠup
C2
100n
R6
5k1
R7
5k1
J13
USB_C_Receptacle_USB2.0_14P
VBUS
CC1
CC2
D−
D+
SHIELD
R8
5k1
R9
5k1
U3
TPD2EUSB30
JP1
Voltage source
POWER
J12
F3
3A/6V
D1
1SMA4734A
C3
100uF
C4
100uF
C5
100uF
C6
100uF
C7
1000uF/6.3V
Use:
– UPW0J102MPD
– PF0J102MNN1012
– EWH1CM102G160
H1
H2
H3
H4