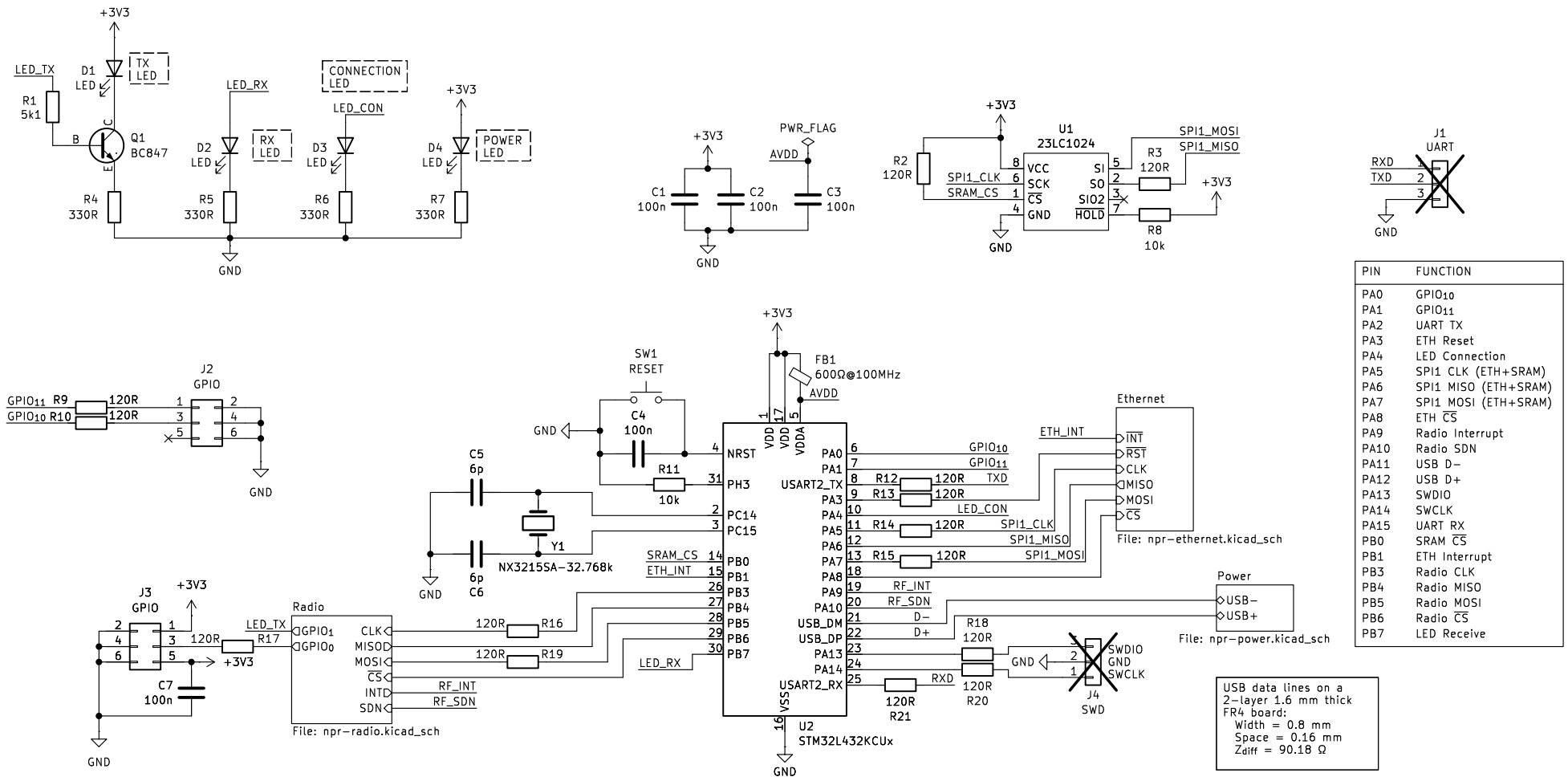

PIN	FUNCTION
PA0	$GPIO_{10}$
PA1	$GPIO_{11}$
PA2	UART TX
PA3	ETH Reset
PA4	LED Connection
PA5	SPI1 CLK (ETH+SRAM)
PA6	SPI1 MISO (ETH+SRAM)
PA7	SPI1 MOSI (ETH+SRAM)
PA8	ETH $\overline{CS}$
PA9	Radio Interrupt
PA10	Radio SDN
PA11	USB D−
PA12	USB D+
PA13	SWDIO
PA14	SWCLK
PA15	UART RX
PB0	SRAM $\overline{CS}$
PB1	ETH Interrupt
PB3	Radio CLK
PB4	Radio MISO
PB5	Radio MOSI
PB6	Radio $\overline{CS}$
PB7	LED Receive

This design is Open−Source Hardware.
Based on the project by F4HDK.

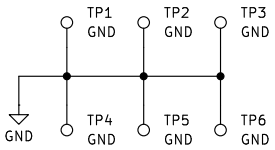

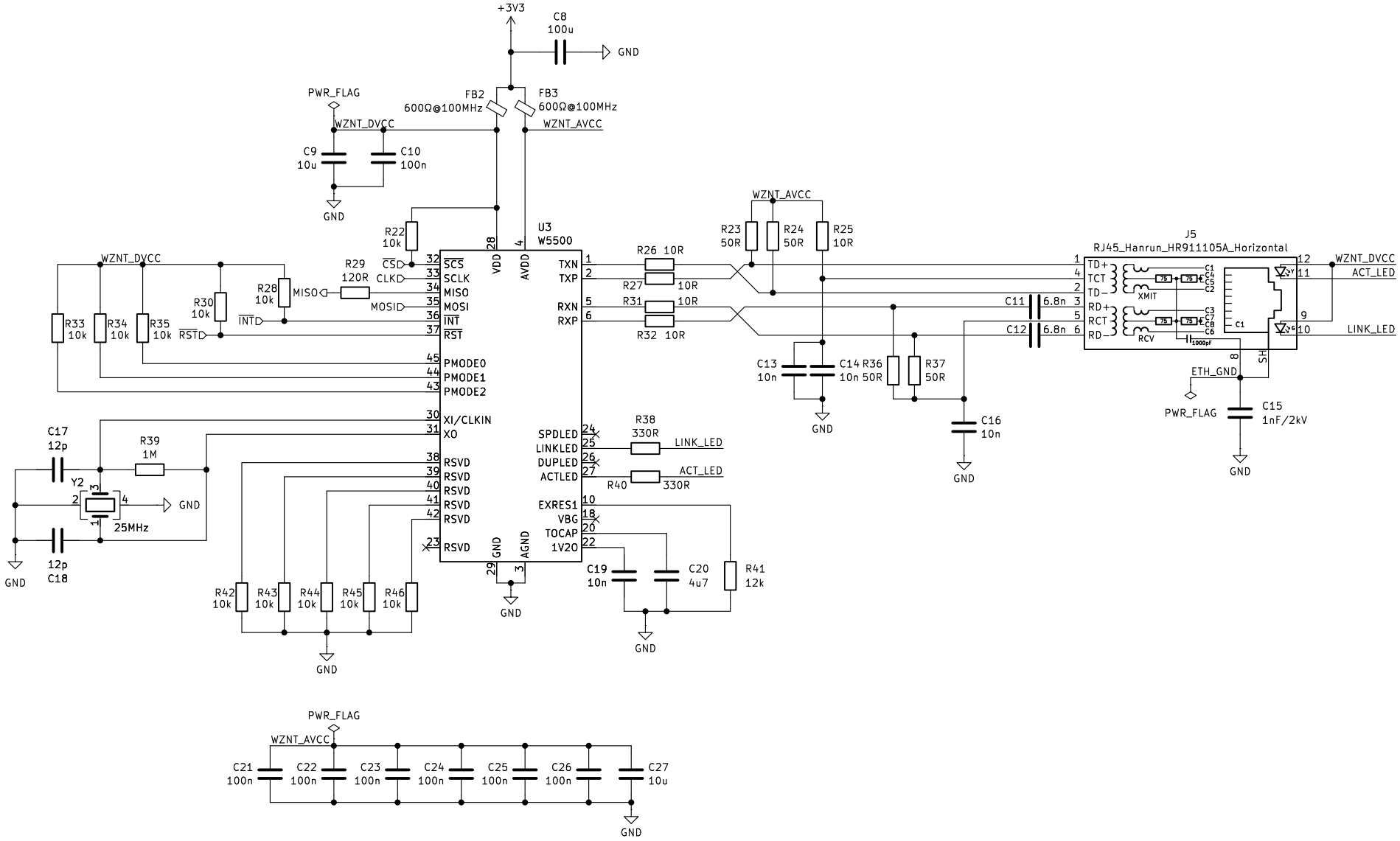
+3V3
C8
100u
GND
PWR_FLAG
FB2
600Ω@100MHz
FB3
600Ω@100MHz
WZNT_DVCC
WZNT_AVCC
C9
10u
C10
100n
GND
R22
10k
U3
W5500
VDD
AVDD
WZNT_DVCC
R29
120R
CS
CLK
MISO
MOSI
INT
RST
R28
10k
MISO
MOSI
R30
10k
INT
RST
R33
10k
R34
10k
R35
10k
PMODE0
PMODE1
PMODE2
XI/CLKIN
XO
C17
12p
R39
1M
Y2
25MHz
GND
12p
C18
GND
RSVD
RSVD
RSVD
RSVD
RSVD
RSVD
R42
10k
R43
10k
R44
10k
R45
10k
R46
10k
GND
GND
AGND
TXN
TXP
RXN
RXP
R26 10R
R27 10R
R31 10R
R32 10R
SPDLED
LINKLED
DUPLED
ACTLED
R38
330R
LINK_LED
R40
330R
ACT_LED
EXRES1
VBG
TOCAP
1V2O
C19
10n
C20
4u7
R41
12k
GND
WZNT_AVCC
R23
50R
R24
50R
R25
10R
C13
10n
C14 R36
10n 50R
R37
50R
C16
10n
GND
GND
J5
RJ45_Hanrun_HR911105A_Horizontal
TD+
TCT
TD−
RD+
RCT
RD−
XMIT
RCV
C11
6.8n
C12
6.8n
1000pF
SH
ETH_GND
PWR_FLAG
C15
1nF/2kV
GND
WZNT_DVCC
ACT_LED
LINK_LED
PWR_FLAG
WZNT_AVCC
C21
100n
C22
100n
C23
100n
C24
100n
C25
100n
C26
100n
C27
10u
GND

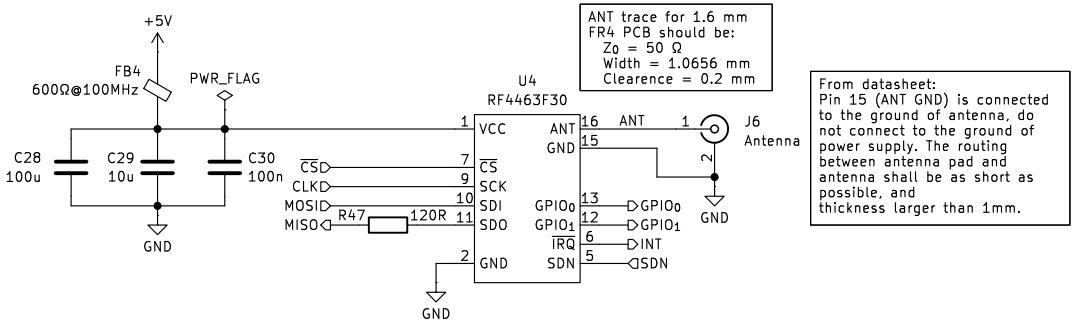

ANT trace for 1.6 mm
FR4 PCB should be:
Z_0 = 50 Ω
Width = 1.0656 mm
Clearence = 0.2 mm

From datasheet:
Pin 15 (ANT GND) is connected to the ground of antenna, do not connect to the ground of power supply. The routing between antenna pad and antenna shall be as short as possible, and thickness larger than 1mm.

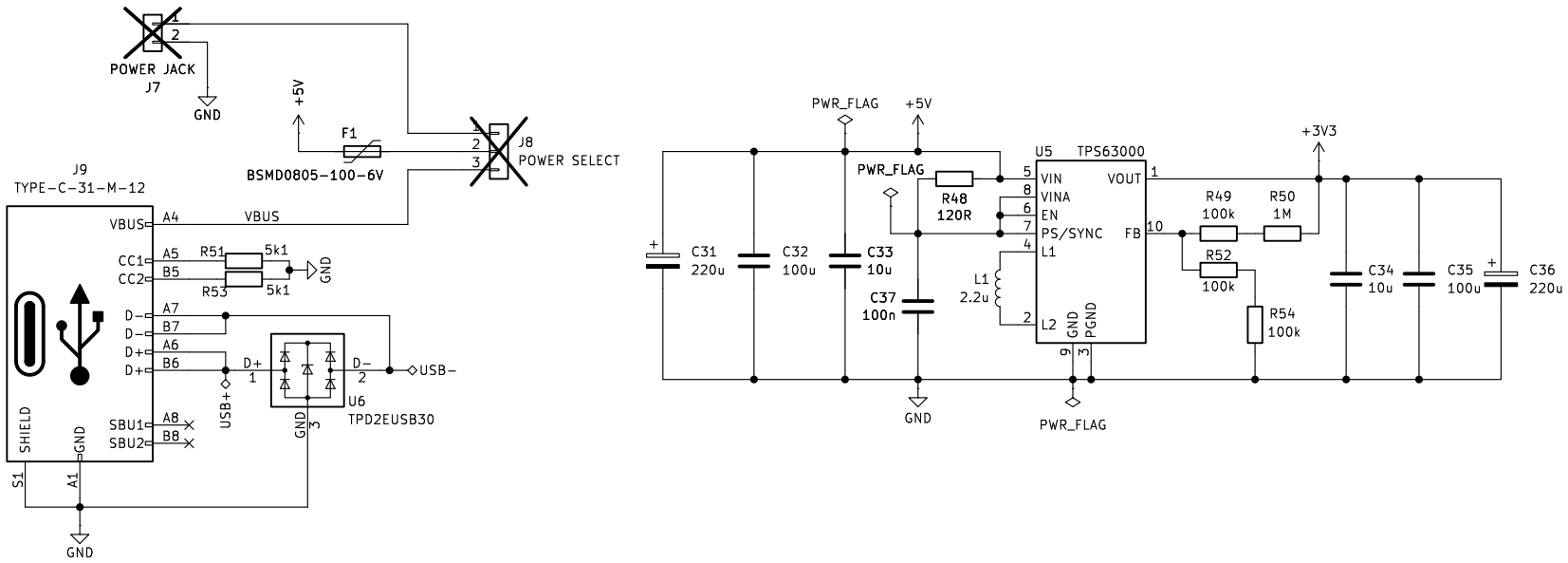
POWER JACK
J7
GND
+5V
F1
BSMD0805-100-6V
J8
POWER SELECT
J9
TYPE-C-31-M-12
VBUS
A4
VBUS
CC1
A5
R51
5k1
CC2
B5
R53
5k1
GND
D-
A7
D-
B7
D+
A6
D+
B6
D+
1
D-
2
USB-
USB+
U6
TPD2EUSB30
GND
3
SBU1
A8
SBU2
B8
SHIELD
GND
S1
A1
GND
PWR_FLAG
+5V
PWR_FLAG
R48
120R
U5
TPS63000
VIN
VINA
EN
PS/SYNC
L1
L2
VOUT
FB
GND
PGND
+3V3
R49
100k
R50
1M
R52
100k
R54
100k
C31
220u
C32
100u
C33
10u
C37
100n
L1
2.2u
C34
10u
C35
100u
C36
220u
GND
PWR_FLAG