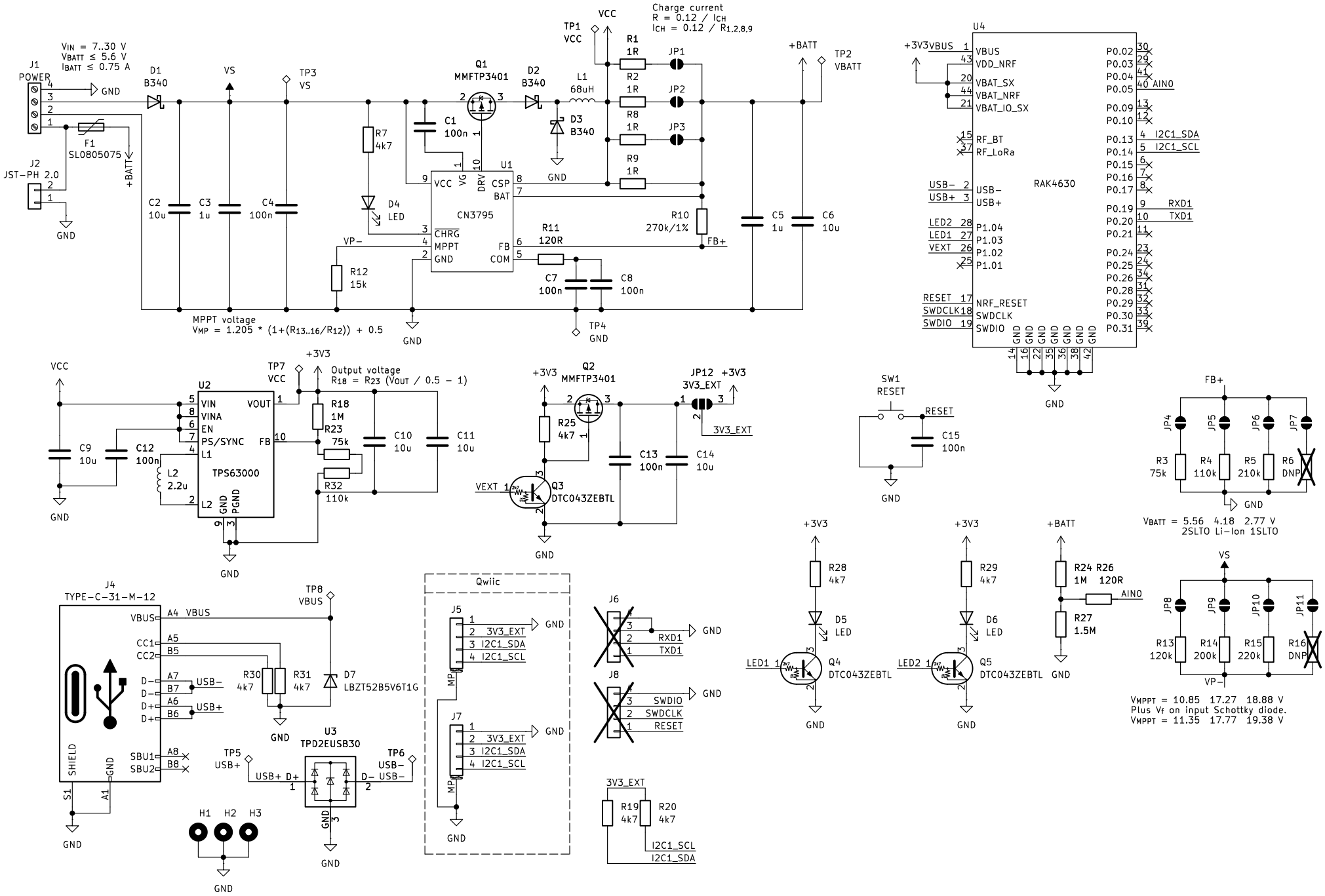
J1 POWER
VIN = 7..30 V
VBATT ≤ 5.6 V
IBATT ≤ 0.75 A
GND
D1 B340
VS
TP3 VS
F1 SL0805075
+BATT
J2 JST-PH 2.0
C2 10u
C3 1u
C4 100n
R7 4k7
D4 LED
VP−
R12 15k
MPPT voltage
VMP = 1.205 * (1+(R13..16/R12)) + 0.5
Q1 MMFTP3401
C1 100n
D2 B340
L1 68uH
D3 B340
U1 CN3795
VCC
VG
DRV
CSP
BAT
CHRG
MPPT
FB
COM
R11 120R
C7 100n
C8 100n
TP4 GND
TP1 VCC
Charge current
R = 0.12 / ICH
ICH = 0.12 / R1,2,8,9
R1 1R
R2 1R
R8 1R
R9 1R
JP1
JP2
JP3
R10 270k/1%
FB+
C5 1u
C6 10u
TP2 VBATT
U4 RAK4630
+3V3 VBUS
VDD_NRF
VBAT_SX
VBAT_NRF
VBAT_IO_SX
RF_BT
RF_LoRa
USB−
USB+
P1.04
P1.03
P1.02
P1.01
NRF_RESET
SWDCLK
SWDIO
P0.02
P0.03
P0.04
P0.05 AIN0
P0.09
P0.10
P0.13 I2C1_SDA
P0.14 I2C1_SCL
P0.15
P0.16
P0.17
P0.19 RXD1
P0.20 TXD1
P0.21
P0.24
P0.25
P0.26
P0.28
P0.29
P0.30
P0.31
LED2
LED1
VEXT
RESET
SWDCLK
SWDIO
U2 TPS63000
VIN
VINA
EN
PS/SYNC
L1
L2
VOUT
FB
GND
PGND
C9 10u
C12 100n
L2 2.2u
TP7 VCC
+3V3
Output voltage
R18 = R23 (VOUT / 0.5 − 1)
R18 1M
R23 75k
R32 110k
C10 10u
C11 10u
Q2 MMFTP3401
R25 4k7
C13 100n
C14 10u
JP12 +3V3
3V3_EXT
Q3 DTC043ZEBTL
SW1 RESET
C15 100n
FB+
JP4
JP5
JP6
JP7
R3 75k
R4 110k
R5 210k
R6 DNP
VBATT = 5.56 4.18 2.77 V
2SLTO Li-Ion 1SLTO
J4 TYPE-C-31-M-12
VBUS
CC1
CC2
D−
D+
SHIELD
SBU1
SBU2
S1
A1
A4 VBUS
A5
B5
A7
B7
A6
B6
A8
B8
USB−
USB+
TP8 VBUS
R30 4k7
R31 4k7
D7 LBZT52B5V6T1G
U3 TPD2EUSB30
TP5 USB+
TP6 USB−
H1
H2
H3
Qwiic
J5
3V3_EXT
I2C1_SDA
I2C1_SCL
MP
J7
J6
RXD1
TXD1
J8
SWDIO
SWDCLK
RESET
3V3_EXT
R19 4k7
R20 4k7
R28 4k7
D5 LED
Q4 DTC043ZEBTL
R29 4k7
D6 LED
Q5 DTC043ZEBTL
R24 R26
1M 120R
AIN0
R27 1.5M
VS
JP8
JP9
JP10
JP11
R13 120k
R14 200k
R15 220k
R16 DNP
VP−
VMPPT = 10.85 17.27 18.88 V
Plus Vf on input Schottky diode.
VMPPT = 11.35 17.77 19.38 V